Turkey
Discover
the potential

TTAF®

CONNECTOR SOLUTIONS

2022v1

TT Connector Series Pin and Data

TTAF Elektronik Ltd was founded in Istanbul /Turkey in 2003, providing interconnect solutions for industrial, telecom and led lighting applications including: Wiring harnesses, Cable Assemblies, Optical Fiber, Power, RF, Molded, Electromechanical Assemblies, Lighting Systems and IP rated outdoor solutions.

Servicing our diverse customers worldwide from our state of the art manufacturing facilities in Istanbul(6000sqm closed area), TTAF is now a global interconnect solutions and cable assembly leader always valuing customer satisfaction.

After more than 30 years in the connector marketplace, TTAF capitalized to create own wire harness and cable assembly business offering wiring harness assemblies using optimum grade wire and other material with the help of cutting-edge machines in adherence to set electronic industry norms.

TTAF is ISO9001:2015, TSE, IPC/WHMA-A-620B, UL, CE, ATEX, ETL & 3P certified to meet even the most demanding quality standards.

WP Connectors and Electrical Splitters

Table of Contents

TT30 Data Series Waterproof Fiber LC DX Connectors	3
TT30 Data Series Waterproof RJ45 Connectors	4
TT30 Data Series Waterproof USB Connectors	5
TT30 Industrial Series Waterproof Connectors	6
TT35 Industrial Series Waterproof Connectors	7
TT20 Industrial Series Waterproof Connectors	8
TT25 Industrial Series Waterproof Connectors	9
3 Pin I Type OD:14mm Screw Connection Field Assembly	10
3 Pin T Type OD:14mm Screw Connection Field Assembly	11
2 Pin Pluggable Screw Connection Field Assembly	12
3 Pin Pluggable Screw Connection Field Assembly	13
4 Pin Pluggable Screw Connection Field Assembly	14
3 Pin I Type Silicone Oring Screw Connection Field Assembly	15
3 Pin I Type TPE Oring Screw Connection Field Assembly	16
3 Pin I Type Push in Wire Field Assembly	17
3 Pin Panel Type Screw Connection Field Assembly	18
3 Pin T Type Screw Connection Field Assembly	19
6 Pin Power I Type Screw Connection Field Assembly	20
3 Power + 6 Data I Type Screw Connection Field Assembly	21
6 Pin Power T Type Screw Connection Field Assembly	22
2 Pin Male Pluggable Field Assembly 1in 3 out	23
2 Pin Female Pluggable Field Assembly 1in 3 out	24
3 Pin Male Pluggable Field Assembly 1in 3 out	25
3 Pin Female Pluggable Field Assembly 1in 3 out	26
4 Pin Male Pluggable Field Assembly 1in 3 out	27
4 Pin Female Pluggable Field Assembly 1in 3 out	28
3 Pin Screw Connection Field Assembly 1in 3 out	29
3 Pin Screw Connection Field Assembly 1in 5 out	30
IP BOX WP-BOX-04	31
IP BOX WP-BOX-05	32
Cable Jointer IPJ50 Series	33
Cable Jointer IPJ24 Series	34
Mini Blade Fuse Type WFH-M Series	35
Mini Blade Fuse Type WFH-K Series	36

PRODUCTION, DESIGN AND TOOLING...

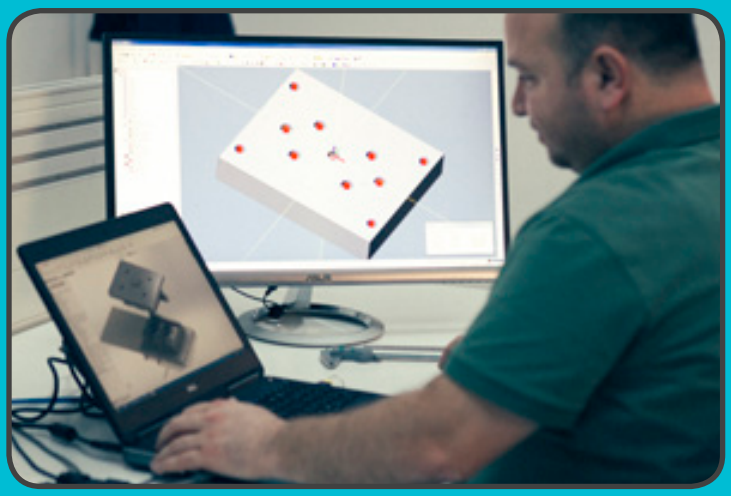

TT30 Data Series
Waterproof Fiber LC DX

Connectors

Fiber LC DX
Plug/Unplug
-40 °C~80 °C

EN 60309-1
EN 60695-2
EN 61984-2009

TTData Series

IP67

NEW PRODUCT

Plug/Unplug
Connecting mode

Fiber Optic LC DX
Connector

TT30 DATA SERIES

Waterproof Data Connectors

Unique
Lock Mechanism

Technical Specifications	Product Code TT30 Data Series Fiber
Type	Fiber
Connecting mode	Plug/Unplug
Durability	500 mating cycles
Receptable Housing	PBT, Black
Cable specification	0.15-0.2mm2 /26-24AWG
Line diameter Scope	5.5mm-7mm
Operating temperature	-40 °C - 80 °C
Waterproof level	IP65 / IP67

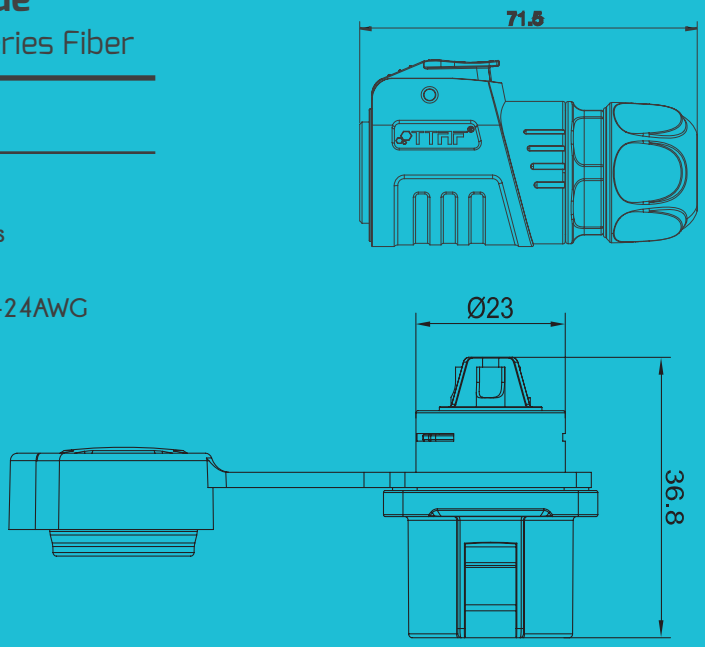

TT30 Data Series Waterproof RJ45

Connectors

RJ45
1.5A
1000V

TTData Series

EN 60309-1
EN 60695-2
EN 61984-2009

IP67

NEW PRODUCT

Plug/Unplug
Connecting mode

RJ45 Connector
Fast data transfer

TT30 DATA SERIES

Waterproof Data Connectors

Unique
Lock Mechanism

Technical Specifications	Product Code TT30 Data Series RJ45
Type	RJ45
Connecting mode	Plug/Unplug
Durability	500 mating cycles
Receptable Housing	PBT, Black
Cable specification	0.15-0.2mm2 /26-24AWG
Line diameter Scope	5.5mm-7mm
Operating temperature	-40 °C - 80 °C
Waterproof level	I P65 / I P67
Rating Current	1.5A
Contact resistance	<30mΩ
Withstanding voltage	1000V

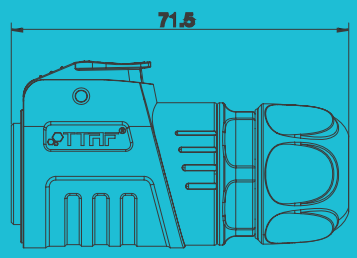

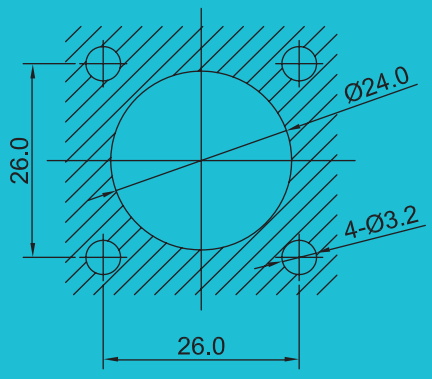

TT30 Data Series Waterproof USB

Connectors

NEW PRODUCT

USB
Plug/Unplug
-40 °C~80 °C

EN 60309-1
EN 60695-2
EN 61984-2009

IP67

TTData Series

Plug/Unplug
Connecting mode

USB Connector
2.0 / 3.0

TT30 DATA SERIES

Waterproof Data Connectors

Unique
Lock Mechanism

Technical Specifications	Product Code TT30 Data Series USB
Type	USB
Connecting mode	Plug/Unplug
Durability	500 mating cycles
Receptable Housing	PBT, Black
Cable specification	0.15-0.2mm2 /26-24AWG
Line diameter Scope	5.5mm-7mm
Operating temperature	-40 °C - 80 °C
Waterproof level	IP65 / IP67

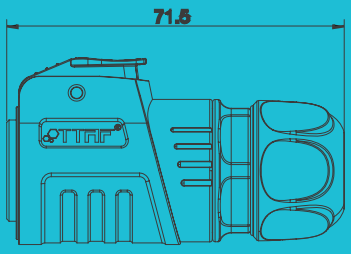

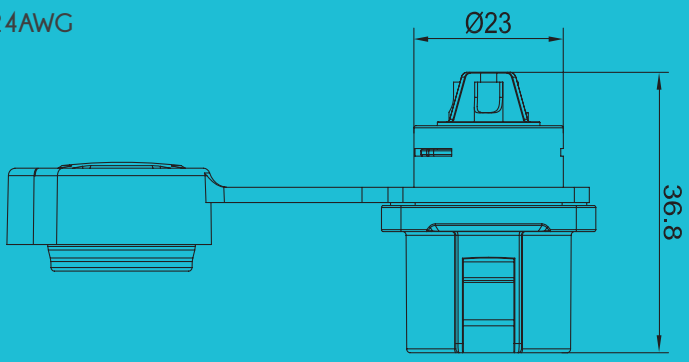

TT30 Series
Industrial Waterproof

Connectors

3,4,10,12,19,24 pin
125~500V
3A~22A

EN 60309-1
EN 60695-2
EN 61984-2009

TTPin Series

IP67

NEW PRODUCT

12 Pin

19 Pin

24 Pin

3 Pin

4 Pin

10 Pin

TT30 SERIES
Industrial Waterproof Connectors

Technical Specifications

Product Code
TT30 Pin Series

Pin Numbers	3pin 4pin	10pin 12pin	19pin 24pin
Rated Current	22A	10A	3A
Operating Voltage	500V	250V	125V
Withstanding Voltage	2500V	2500V	1500V
Contact Resistance	<1mΩ	<3mΩ	<5mΩ
Temperature Rise	20A 30 °C 25A 40 °C 30A 50 °C	10A 30 °C 15A 40 °C 20A 50°C	3A 30 °C 7A 40 °C 10A 50°C 1
Contact Dimension	3.0*3-3.0*4	1.5*10-1.5*12	1.0*19-1.0*24
Seal Material	Silicone	Silicone	Silicone
Maint Cycle	1700 Times	1700 Times	1700 Times

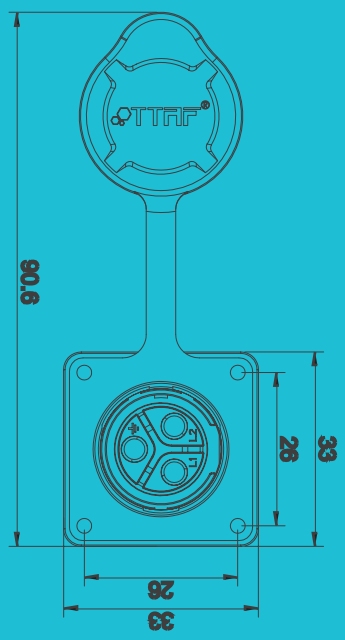

TT35 Series
Industrial Waterproof

Connectors

3,4,10,12,19,24 pin
125~500V
3A~22A

EN 60309-1
EN 60695-2
EN 61984-2009

TTPin Series

IP67

NEW PRODUCT

12 Pin

19 Pin

24 Pin

3 Pin

4 Pin

10 Pin

TT35 SERIES
Industrial Waterproof Connectors

Technical Specifications

Product Code
TT35 Pin Series

Pin Numbers	3pin 4pin	10pin 12pin	19pin 24pin
Rated Current	22A	10A	3A
Operating Voltage	500V	250V	125V
Withstanding Voltage	2500V	2500V	1500V
Contact Resistance	<1mΩ	<3mΩ	<5mΩ
Temperature Rise	20A 30 °C 25A 40 °C 30A 50 °C	10A 30 °C 15A 40 °C 20A 50°C	3A 30 °C 7A 40 °C 10A 50°C 1
Contact Dimension	3.0*3-3.0*4	1.5*10-1.5*12	1.0*19-1.0*24
Seal Material	Silicone	Silicone	Silicone
Maint Cycle	1700 Times	1700 Times	1700 Times

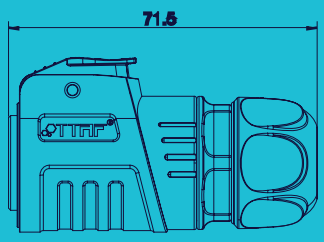

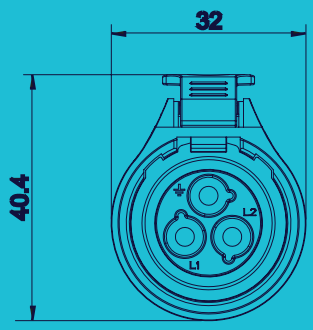

TT20 Series
Industrial Waterproof

Connectors

2,4,3,5,7,9,12 pin
400~500V
5A~20A

EN 60309-1
EN 60695-2
EN 61984-2009

TTPin Series

IP67

NEW PRODUCT

Technical Specifications

Product Code
TT20 Pin Series

Pin Numbers	2pin 3pin 4pin	5pin 7pin	9pin 12pin
Rated Current	20A	12A	5A
Operating Voltage	500V	500V	400V
Withstanding Voltage	2500V	2500V	1500V
Contact Resistance	<1mΩ	<2.5mΩ	<5mΩ
Temperature Rise	20A 30 °C 25A 40 °C 30A 50 °C	12A 30 °C 15A 40 °C 20A 50°C	5A 30 °C 7A 40 °C 10A 50°C 1
Contact Dimension	2.7*2-2.7*3-2.7*4	1.8*5-1.8*7	1.0*9-1.0*12
Seal Material	Silicone	Silicone	Silicone
Maint Cycle	1700 Times	1700 Times	1700 Times

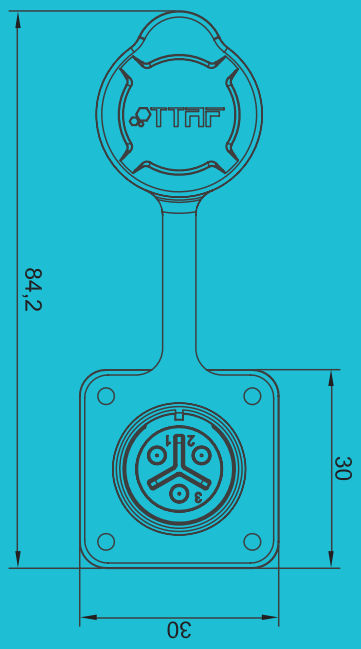

TT25 Series
Industrial Waterproof

Connectors

2,4,3,5,7,9,12 pin
400~500V
5A~20A

EN 60309-1
EN 60695-2
EN 61984-2009

TTPin Series

IP67

NEW PRODUCT

Technical Specifications

Product Code
TT25 Pin Series

Pin Numbers	2pin 3pin 4pin	5pin 7pin	9pin 12pin
Rated Current	20A	12A	5A
Operating Voltage	500V	500V	400V
Withstanding Voltage	2500V	2500V	1500V
Contact Resistance	<1mΩ	<2.5mΩ	<5mΩ
Temperature Rise	20A 30 °C 25A 40 °C 30A 50 °C	12A 30 °C 15A 40 °C 20A 50°C	5A 30 °C 7A 40 °C 10A 50°C 1
Contact Dimension	2.7*2-2.7*3-2.7*4	1.8*5-1.8*7	1.0*9-1.0*12
Seal Material	Silicone	Silicone	Silicone
Maint Cycle	1700 Times	1700 Times	1700 Times

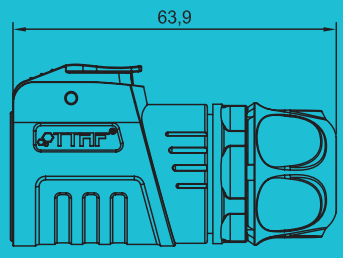

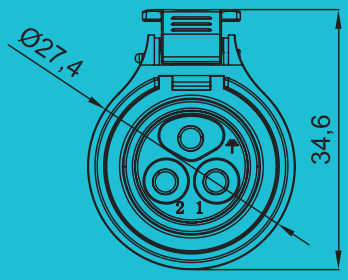

3 Pin I Type OD:14mm Screw Connection Field Assembly

Connector

NEW PRODUCT

3 pin
250 VAC
20A

EN 60309-1
EN 60695-2
EN 61984-2009

IP68
10m / 60min

WPI Series

GONTUANA
Waterproof Connector Series

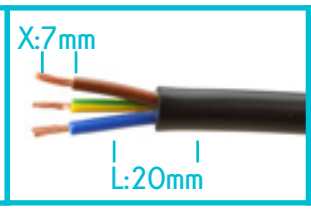

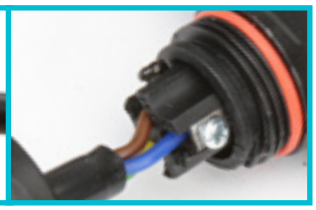

Technical Specifications	Product Code WPI-0302M20/14
Number of Poles	3
Voltage Rating	250VAC max.
Current Rating	20A max.
Cable Cross Section Area	0,5mm² ~ 2.5mm²
Durability Voltage	1500VAC@60s.
Insulation Structure	500 MΩ at 500VDC
Contact Resistance	10 mΩ max.
Min Wire Size OD	6,5mm ~ 10mm
Max Wire Size OD	10,5mm ~ 14mm
Temperature Rating	-40°C ~ +85°C
IP Class	IP68 (10m / 60min)
Mold Material	PA6
Contact/Terminal Material	Nickel-Plated Brass
Seal Material	Silicone

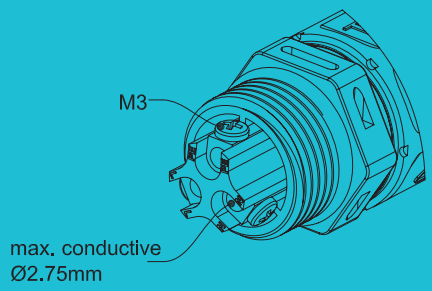

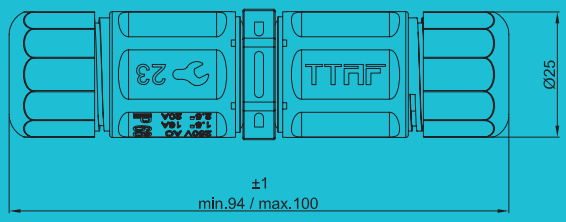

3 Pin T Type OD:14mm Screw Connection Field Assembly

Connector

NEW PRODUCT

3 pin
250 VAC
20A

EN 60309-1
EN 60695-2
EN 61984-2009

IP68
10m / 60min

WPT Series

GONTUANA
Waterproof Connector Series

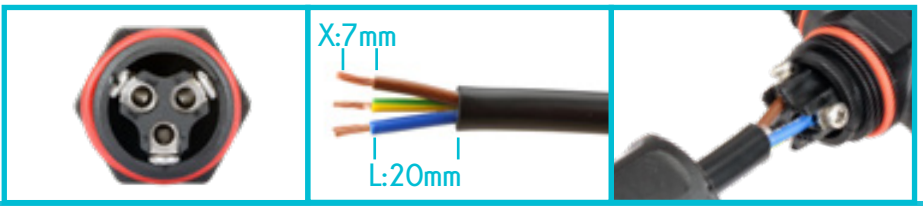

Technical Specifications	Product Code WPT-0303M20/14
Number of Poles	3
Voltage Rating	250VAC max.
Current Rating	20A max.
Cable Cross Section Area	0,5mm² ~ 2,5mm²
Durability Voltage	1500VAC@60s.
Insulation Structure	500 MΩ at 500VDC
Contact Resistance	10 mΩ max.
Min Wire Size OD	6,5mm ~ 10mm
Max Wire Size OD	10,5mm ~ 14mm
Temperature Rating	-40°C ~ +85°C
IP Class	IP68 (10m / 60min)
Mold Material	PA6
Contact/Terminal Material	Nickel-Plated Brass
Seal Material	Silicone

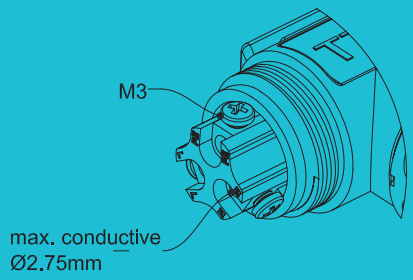

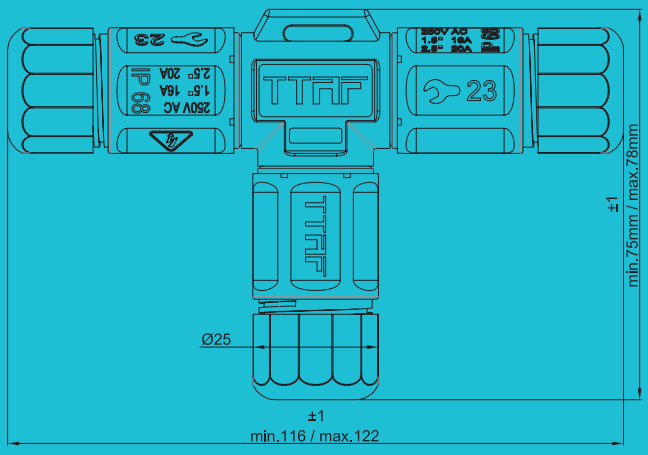

2 Pin Pluggable Screw Connection Field Assembly

Connectors

NEW DESIGN

WPM-WPF-WPP Series

2 pin
250 VAC
20A

IP68
10m / 60min

WPM-0200M20

2 Pin Male Cable Type

WPF-0200M20

2 Pin Female Cable Type

WPP-0200M20

2 Pin Male Panel Type

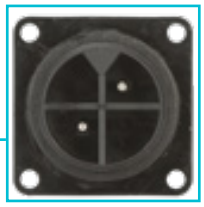

GONTUANA®
Waterproof Connector Series

Technical Specifications

Product Codes

WPM-0200M20
WPF-0200M20
WPP-0200M20

Number of Poles	2
Voltage Rating	250VAC max.
Current Rating	20A max.
Cable Cross Section Area	0,5mm² ~ 2,5mm²
Durability Voltage	3000VAC@60s.
Insulation Structure	500 MΩ at 500VDC
Contact Resistance	30 mΩ max.
Min Wire Size OD	6mm
Max Wire Size OD	10mm
Temperature Rating	-40°C ~ +85°C
IP Class	IP68 (10m / 60min)
Mold Material	PA6
Contact/Terminal Material	Nickel-Plated Brass
Seal Material	Silicone

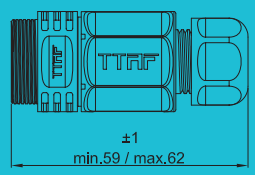

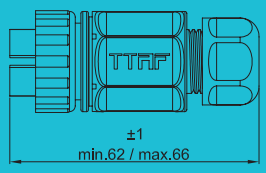

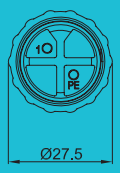

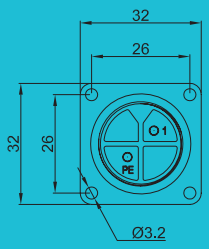

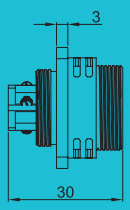

3 Pin Pluggable Screw Connection Field Assembly

Connectors

NEW DESIGN

WPM-WPF-WPP Series

3 pin
250 VAC
20A

IP68
10m / 60min

WPM-0300M20

3 Pin Male Cable Type

WPF-0300M20

3 Pin Female Cable Type

WPP-0300M20

3 Pin Male Panel Type

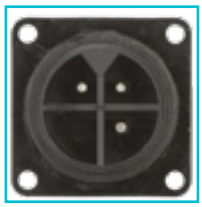

GONTUANA®
Waterproof Connector Series

Technical Specifications

	Product Codes WPM-0300M20 WPF-0300M20 WPP-0300M20
Number of Poles	3
Voltage Rating	250VAC max.
Current Rating	20A max.
Cable Cross Section Area	0,5mm² ~ 2,5mm²
Durability Voltage	3000VAC@60s.
Insulation Structure	500 MΩ at 500VDC
Contact Resistance	30 mΩ max.
Min Wire Size OD	6mm
Max Wire Size OD	10mm
Temperature Rating	-40°C ~ +85°C
IP Class	IP68 (10m / 60min)
Mold Material	PA6
Contact/Terminal Material	Nickel-Plated Brass
Seal Material	Silicone

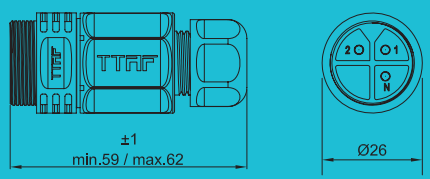

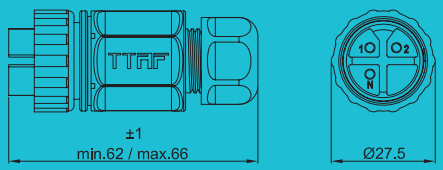

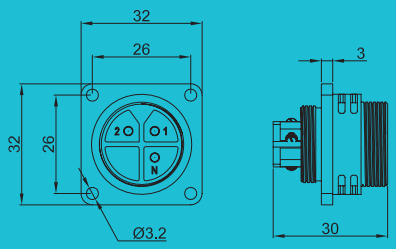

4 Pin Pluggable Screw Connection Field Assembly

Connectors

NEW DESIGN

WPM-WPF-WPP Series

4 pin
250 VAC
20A

IP68
10m / 60min

WPM-0400M20

4 Pin Male Cable Type

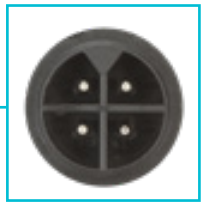

WPF-0400M20

4 Pin Female Cable Type

WPP-0400M20

4 Pin Male Panel Type

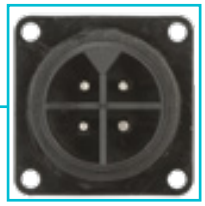

GONTUANA®
Waterproof Connector Series

Technical Specifications

Product Codes

WPM-0400M20
WPF-0400M20
WPP-0400M20

Number of Poles	4
Voltage Rating	250VAC max.
Current Rating	20A max.
Cable Cross Section Area	0,5mm² ~ 2,5mm²
Durability Voltage	3000VAC@60s.
Insulation Structure	500 MΩ at 500VDC
Contact Resistance	30 mΩ max.
Min Wire Size OD	6mm
Max Wire Size OD	10mm
Temperature Rating	-40°C ~ +85°C
IP Class	IP68 (10m / 60min)
Mold Material	PA6
Contact/Terminal Material	Nickel-Plated Brass
Seal Material	Silicone

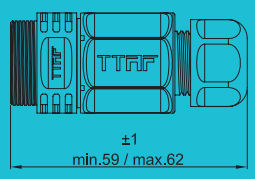

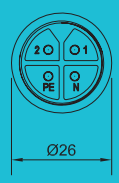

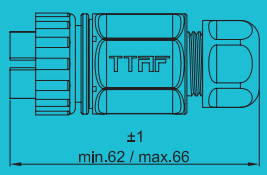

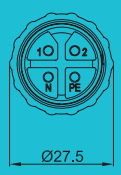

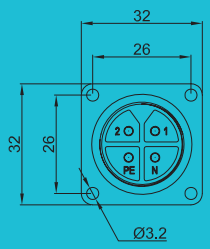

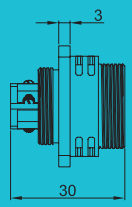

3 Pin I Type Screw Connection Field Assembly

Connector

NEW DESIGN

3 pin
250 VAC
20A

EN 60309-1
EN 60695-2
EN 61984-2009

IP68
10m / 60min

WPI Series

GONTUANA
Waterproof Connector Series

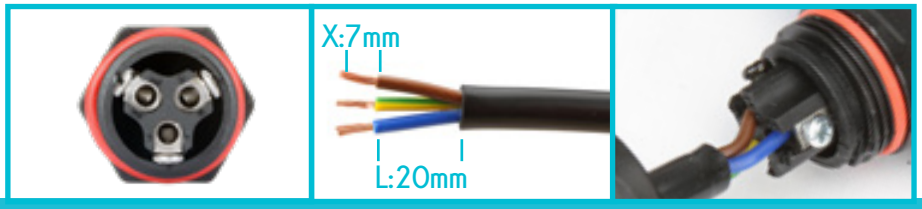

Technical Specifications	Product Code WPI-0302M20
Number of Poles	3
Voltage Rating	250VAC max.
Current Rating	20A max.
Cable Cross Section Area	0,5mm² ~ 2.5mm²
Durability Voltage	1500VAC@60s.
Insulation Structure	500 MΩ at 500VDC
Contact Resistance	10 mΩ max.
Min Wire Size OD	6mm
Max Wire Size OD	10mm
Temperature Rating	-40°C ~ +85°C
IP Class	IP68 (10m / 60min)
Mold Material	PA6
Contact/Terminal Material	Nickel-Plated Brass
Seal Material	Silicone

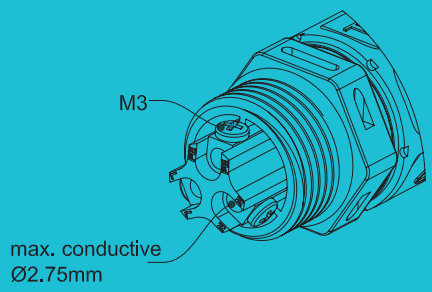

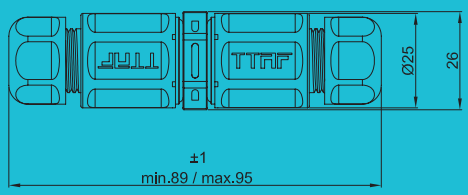

3 Pin I Type Screw Connection Field Assembly

Connectors

NEW DESIGN

WPI Series

3 pin
250 VAC
20A

IP68
10m / 60min

GONTUANA
Waterproof Connector Series

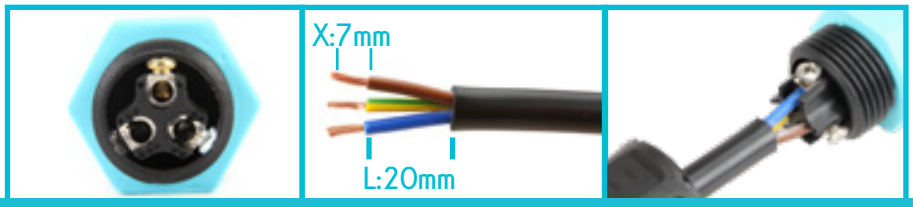

Technical Specifications	Product Code WPI-0302M20/U2
Number of Poles	3
Voltage Rating	250VAC max.
Current Rating	20A max.
Cable Cross Section Area	0,5mm² ~ 2,5mm²
Durability Voltage	1500VAC@60s.
Insulation Structure	500 MΩ at 500VDC
Contact Resistance	10 mΩ max.
Min Wire Size OD	6mm
Max Wire Size OD	10mm
Temperature Rating	-40°C ~ +85°C
IP Class	IP68 (10m / 60min)
Mold Material	PA6
Contact/Terminal Material	Nickel-Plated Brass

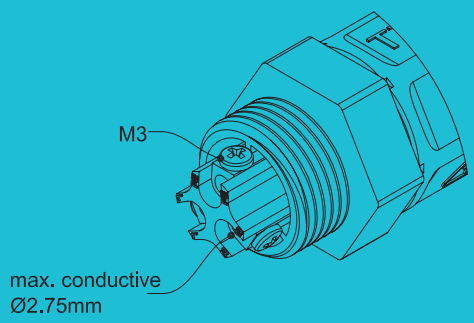

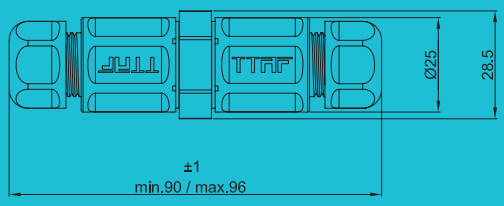

3 Pin I Type Push in Wire Field Assembly

Connector

NEW DESIGN

WPK Series

3 pin
250 VAC
6A

IP68
10m / 60min

GONTUANA®
Waterproof Connector Series

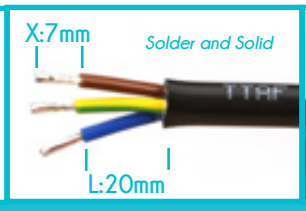

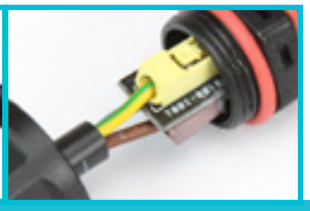

Technical Specifications	Product Code WPK-0302M6
Number of Poles	3
Voltage Rating	250VAC max.
Current Rating	6A max.
Cable Cross Section Area	0,5mm² ~ 1,5mm²
Durability Voltage	1250VAC@60s.
Insulation Structure	1000 MΩ@1000V
Contact Resistance	12 mΩ
Min Wire Size OD	6mm
Max Wire Size OD	10mm
Operating Temperature	-40°C ~ +85°C
IP Class	IP68 (10m / 60min)
Mold Material	PA6
Terminal Type	Push Button Screwless Terminal
Contact Material	Phosphor Bronze, Tin-Plated
Seal Material	Silicone

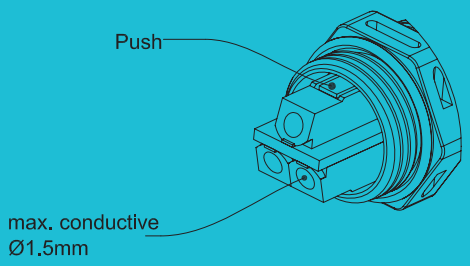

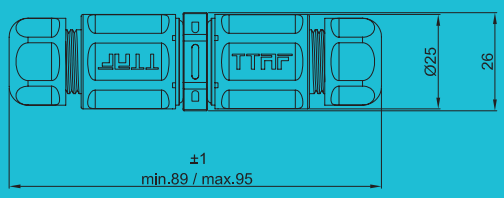

3 Pin Panel Type Screw Connection Field Assembly

Connector

NEW DESIGN

WPP Series

3 pin
250 VAC
20A

IP68
10m / 60min

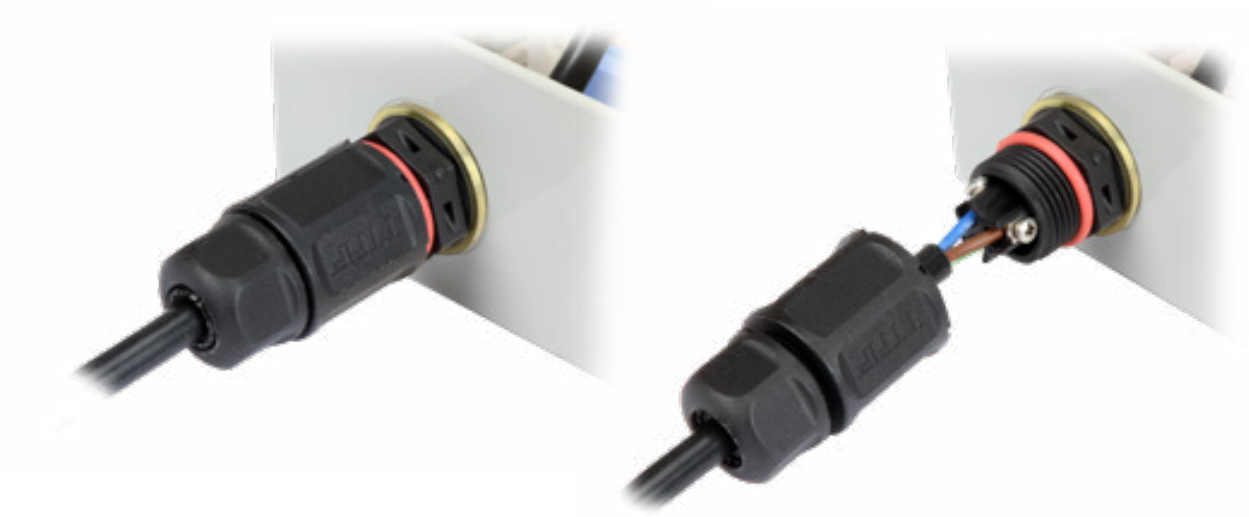

GONTUANA
Waterproof Connector Series

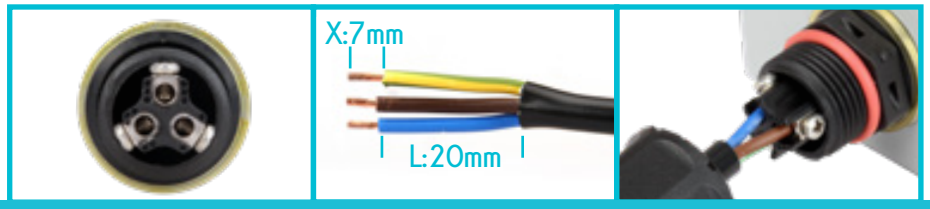

Technical Specifications	Product Code WPP-0302M20
Number of Poles	3
Voltage Rating	250VAC max.
Current Rating	20A max.
Cable Cross Section Area	0,5mm² ~ 2,5mm²
Durability Voltage	1500VAC@60s.
Contact Resistance	10 mΩ max.
Insulation Structure	500 MΩ at 500VDC
Min Wire Size OD	6mm
Max Wire Size OD	10mm
Temperature Rating	-40°C ~ +85°C
IP Class	IP68 (10m / 60min)
Mold Material	PA6
Contact/Terminal Material	Nickel-Plated Brass
Seal Material	Silicone
Chasis Hole Dia	Ø16mm
Chasis max. Thickness	3,5mm

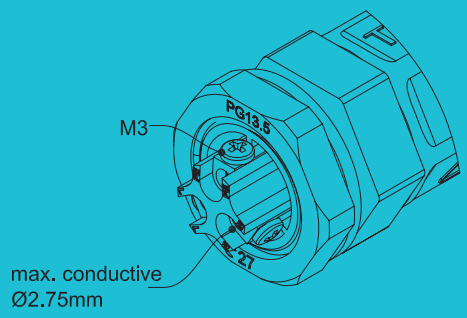

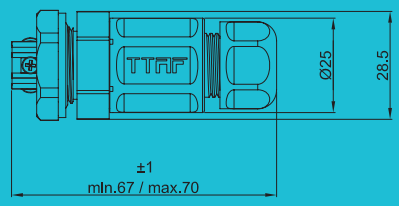

3 Pin T Type Screw Connection Field Assembly

Connector

NEW DESIGN

3 pin
250 VAC
20A

EN 60309-1
EN 60695-2
EN 61984-2009

IP68
10m / 60min

WPT Series

GONTUANA
Waterproof Connector Series

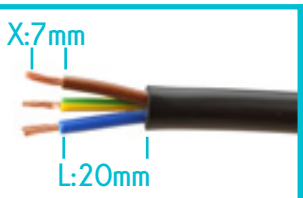

Technical Specifications	Product Code WPT-0303M20
Number of Poles	3
Voltage Rating	250VAC max.
Current Rating	20A max.
Cable Cross Section Area	0,5mm² ~ 2,5mm²
Durability Voltage	1500VAC@60s.
Insulation Structure	500 MΩ at 500VDC
Contact Resistance	10 mΩ max.
Min Wire Size OD	6mm
Max Wire Size OD	10mm
Temperature Rating	-40°C ~ +85°C
IP Class	IP68 (10m / 60min)
Mold Material	PA6
Contact/Terminal Material	Nickel-Plated Brass
Seal Material	Silicone

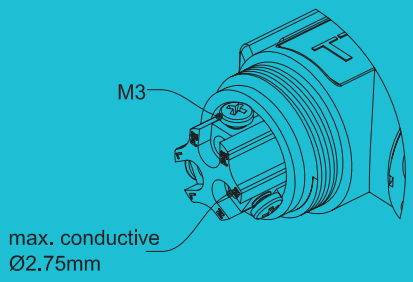

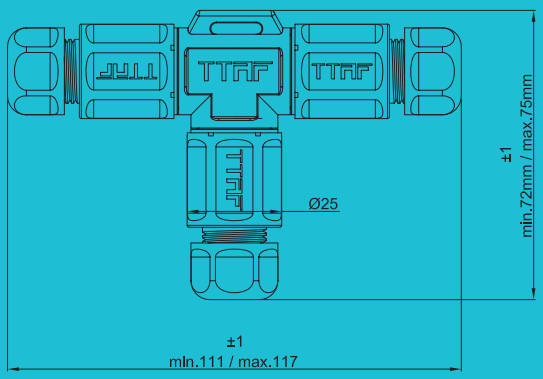

6 Pin Power I Type Screw Connection Field Assembly

Connector

WPI Series

6 pin
250 VAC
25A

IP68
10m / 60min

GONTUANA
Waterproof Connector Series

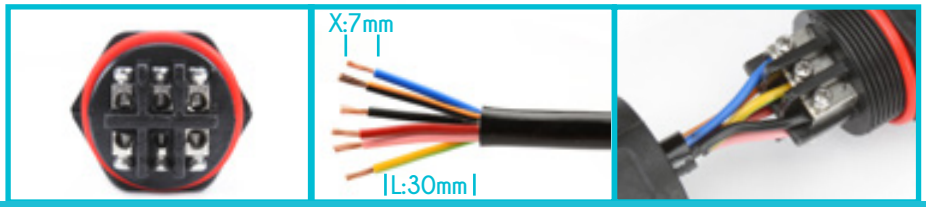

Technical Specifications	Product Code WPI-0602M25
Number of Poles	6
Voltage Rating	250VAC max.
Current Rating	25A max.
Cable Cross Section Area	0,75mm² ~ 4mm²
Durability Voltage	1500VAC@60s.
Insulation Structure	1000 MΩ at 1000VDC
Contact Resistance	1 mΩ max.
Min Wire Size OD	10mm
Max Wire Size OD	14mm
Temperature Rating	-40°C ~ +85°C
IP Class	IP68 (10m / 60min)
Mold Material	PA6
Contact/Terminal Material	Nickel-Plated Brass
Seal Material	Silicone

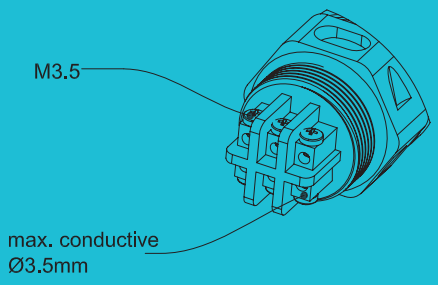

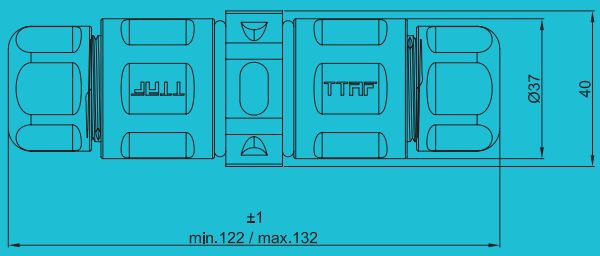

3 Power + 6 Data I Type Screw Connection Field Assembly

Connector

WPI Series

3 Power + 6 Data
250 VAC Power, 50 VDC Data
25A Power + 1A Data

IP68
10m / 60min

GONTUANA
Waterproof Connector Series

Cable Code : KBL-9144

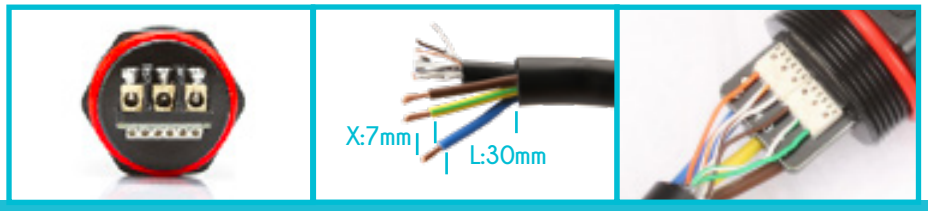

Technical Specifications	Product Code WPI-3602M25
Number of Poles	3 Power + 6 Data
Voltage Rating	Power: 250VAC max. + Data: 50 VDC/VAC
Current Rating	Power: 25A max. + Data: 1 Amper
Cable Cross Section Area	Power:2.5mm² - Data:0,2mm²
Durability Voltage	1500VAC@60s.
Insulation Structure	1000 MΩ at 1000VDC
Contact Resistance	1 mΩ max.
Min Wire Size OD	10mm
Max Wire Size OD	14mm
Temperature Rating	-40°C ~ +85°C
IP Class	IP68 (10m / 60min)
Mold Material	PA6
Contact/Terminal Material	Nickel-Plated Brass
Seal Material	Silicon

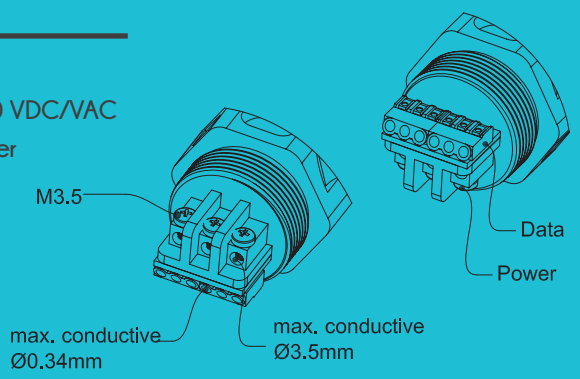

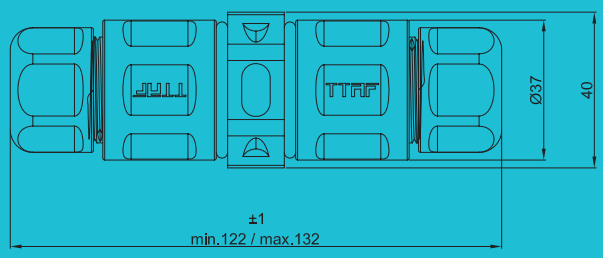

2 Pin Female Pluggable Field Assembly 1in 3 out

Electrical Splitter

WPS Series

2 pin
250 VAC
20A

IP68
10m / 60min

1x3
1in 3 out

2 Pin

FOBOS®
Waterproof Electrical Splitter Series

Technical Specifications

Number of Poles	2
Voltage Rating	250VAC max.
Current Rating	20A max.
Durability Voltage	3000VAC@60s.
Insulation Structure	500 MΩ at 500VDC
Contact Resistance	30 mΩ max.
Temperature Rating	-40°C ~ +85°C
IP Class	IP68 (10m / 60min)
Mold Material	PA6
Contact/Terminal Material	Nickel-Plated Brass
Seal Material	Silicone

Product Code
WPS-0204N20F

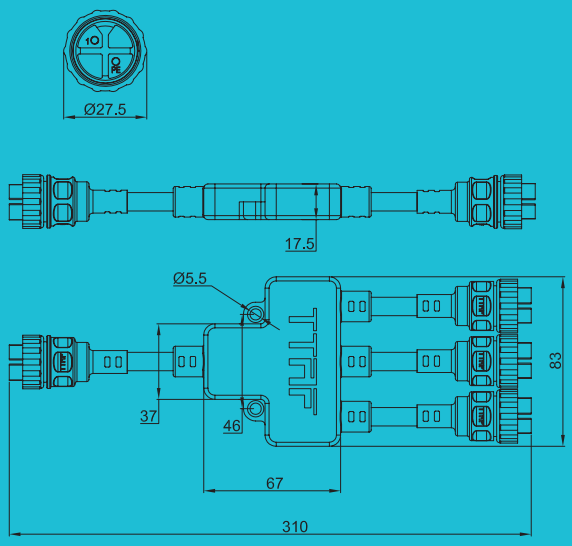

3 Pin Male Pluggable Field Assembly 1in 3 out

Electrical Splitter

WPS Series

3 pin
250 VAC
20A

IP68
10m / 60min

1x3
1 in 3 out

3 Pin

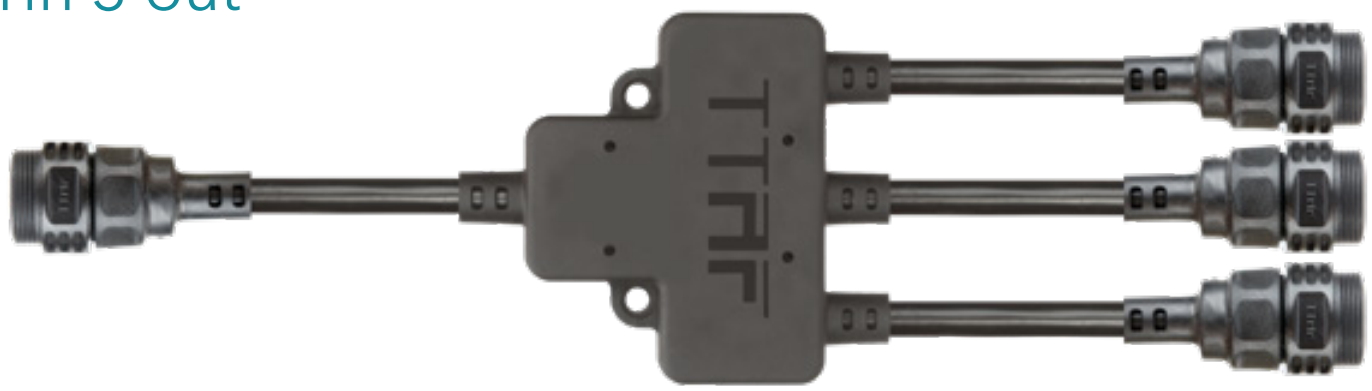

FOBOS®
Waterproof Electrical Splitter Series

Technical Specifications	Product Code WPS-0304N20M
Number of Poles	3
Voltage Rating	250VAC max.
Current Rating	20A max.
Durability Voltage	3000VAC@60s.
Insulation Structure	500 MΩ at 500VDC
Contact Resistance	30 mΩ max.
Temperature Rating	-40°C ~ +85°C
IP Class	IP68 (10m / 60min)
Mold Material	PA6
Contact/Terminal Material	Nickel-Plated Brass
Seal Material	Silicone

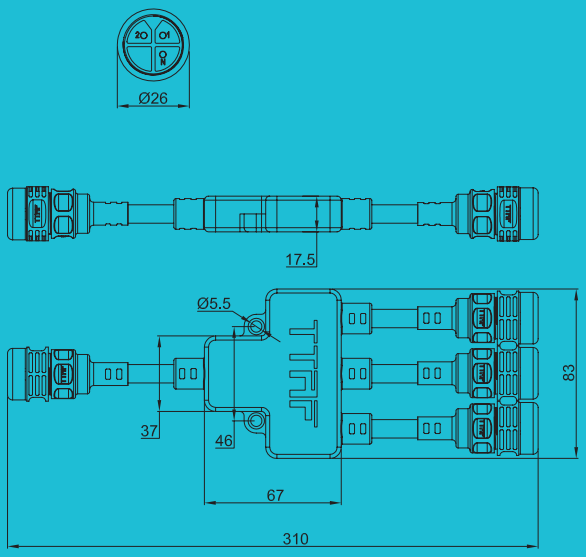

6 Pin Power T Type Screw Connection Field Assembly

Connector

WPT Series

6 pin
250 VAC
25A

IP68
10m / 60min

GONTUANA
Waterproof Connector Series

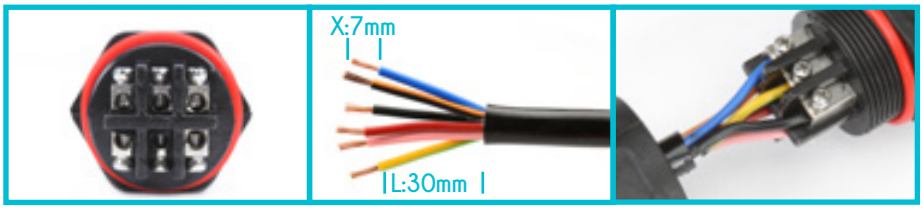

Technical Specifications	Product Code WPT-0603M25
Number of Poles	6
Voltage Rating	250VAC max.
Current Rating	25A max.
Cable Cross Section Area	0,75mm² ~ 4mm²
Durability Voltage	1500VAC@60s.
Insulation Structure	1000 MΩ at 1000VDC
Contact Resistance	10 mΩ max.
Min Wire Size OD	10mm
Max Wire Size OD	14mm
Temperature Rating	-40°C ~ +85°C
IP Class	IP68 (10m / 60min)
Mold Material	PA6
Contact/Terminal Material	Nickel-Plated Brass
Seal Material	Silicone

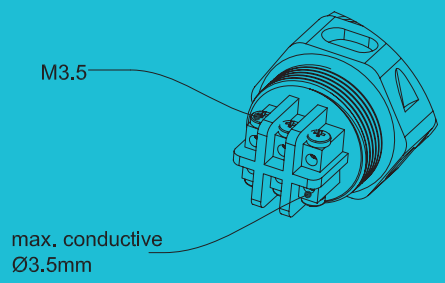

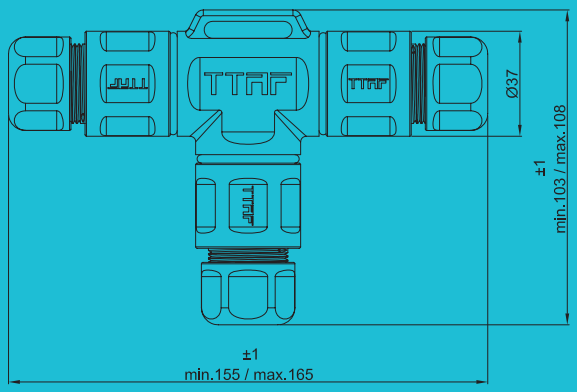

2 Pin Male Pluggable Field Assembly 1in 3 out

Electrical Splitter

WPS Series

2 pin
250 VAC
20A

IP68
10m / 60min

1x3
1in 3 out

2 Pin

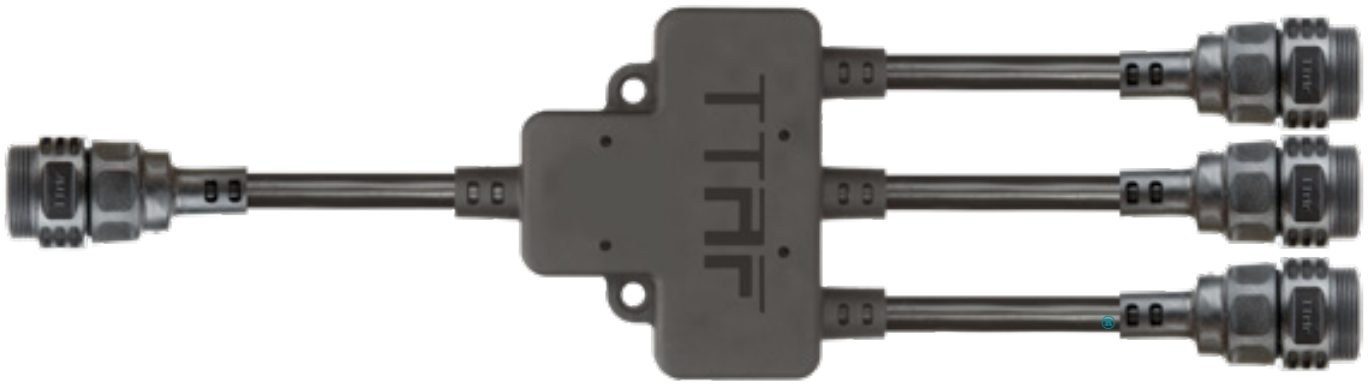

FOBOS
Waterproof Electrical Splitter Series

Technical Specifications	Product Code WPS-0204N20M
Number of Poles	2
Voltage Rating	250VAC max.
Current Rating	20A max.
Durability Voltage	3000VAC@60s.
Insulation Structure	500 MΩ at 500VDC
Contact Resistance	30 mΩ max.
Temperature Rating	-40°C ~ +85°C
IP Class	IP68 (10m / 60min)
Mold Material	PA6
Contact/Terminal Material	Nickel-Plated Brass
Seal Material	Silicone

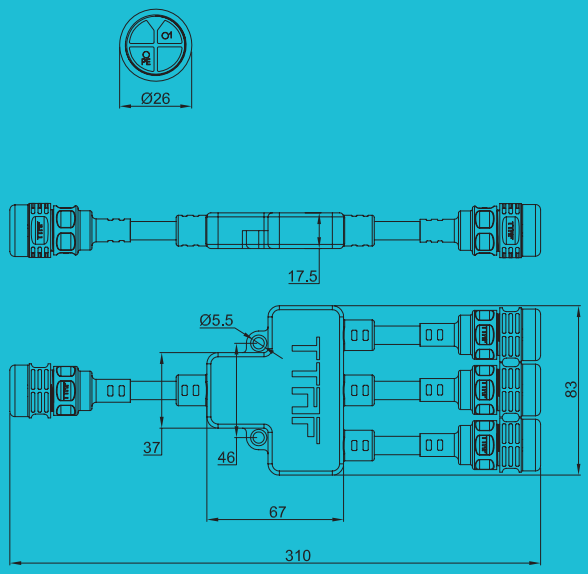

3 Pin Female Pluggable Field Assembly 1in 3 out

Electrical Splitter

WPS Series

3 pin
250 VAC
20A

IP68
10m / 60min

1x3
1in 3 out

3 Pin

FOBOS®
Waterproof Electrical Splitter Series

Technical Specifications	Product Code WPS-0304N20F
Number of Poles	3
Voltage Rating	250VAC max.
Current Rating	20A max.
Durability Voltage	3000VAC@60s.
Insulation Structure	500 MΩ at 500VDC
Contact Resistance	30 mΩ max.
Temperature Rating	-40°C ~ +85°C
IP Class	IP68 (10m / 60min)
Mold Material	PA6
Contact/Terminal Material	Nickel-Plated Brass
Seal Material	Silicone

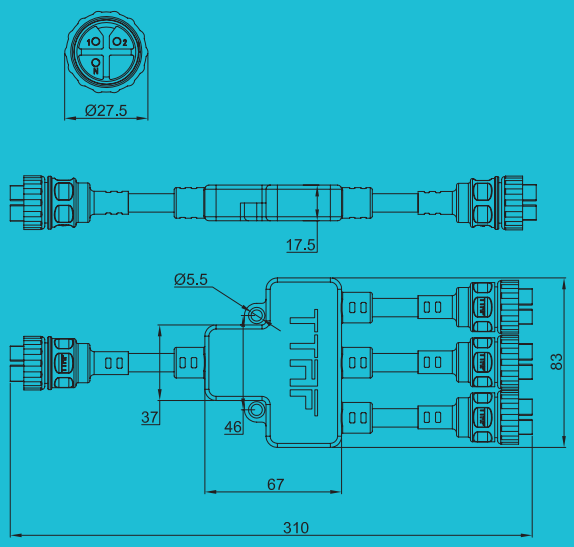

4 Pin Male Pluggable Field Assembly 1in 3 out

Electrical Splitter

WPS Series

4 pin
250 VAC
20A

IP68
10m / 60min

1x3
1in 3 out

4 Pin

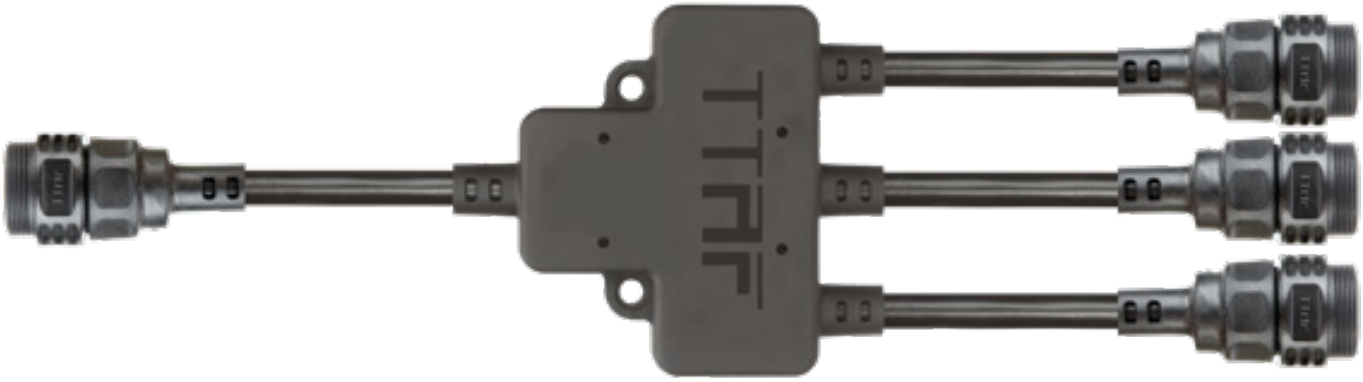

FOBOS®
Waterproof Electrical Splitter Series

Technical Specifications	Product Code WPS-0404N20M
Number of Poles	4
Voltage Rating	250VAC max.
Current Rating	20A max.
Durability Voltage	3000VAC@60s.
Insulation Structure	500 MΩ at 500VDC
Contact Resistance	30 mΩ max.
Temperature Rating	-40°C ~ +85°C
IP Class	IP68 (10m / 60min)
Mold Material	PA6
Contact/Terminal Material	Nickel-Plated Brass
Seal Material	Silicone

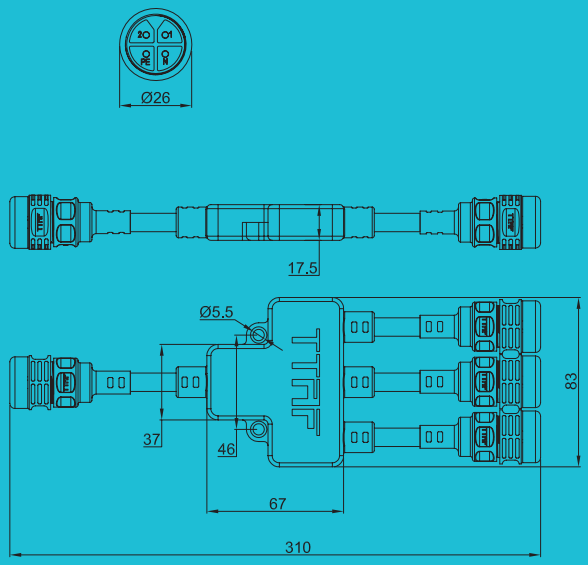

4 Pin Female Pluggable Field Assembly 1in 3 out

Electrical Splitter

WPS Series

4 pin
250 VAC
20A

IP68
10m / 60min

1x3
1in 3 out

4 Pin

FOBOS®
Waterproof Electrical Splitter Series

Technical Specifications	Product Code WPS-0404N20F
Number of Poles	4
Voltage Rating	250VAC max.
Current Rating	20A max.
Durability Voltage	3000VAC@60s.
Insulation Structure	500 MΩ at 500VDC
Contact Resistance	30 mΩ max.
Temperature Rating	-40°C ~ +85°C
IP Class	IP68 (10m / 60min)
Mold Material	PA6
Contact/Terminal Material	Nickel-Plated Brass
Seal Material	Silicone

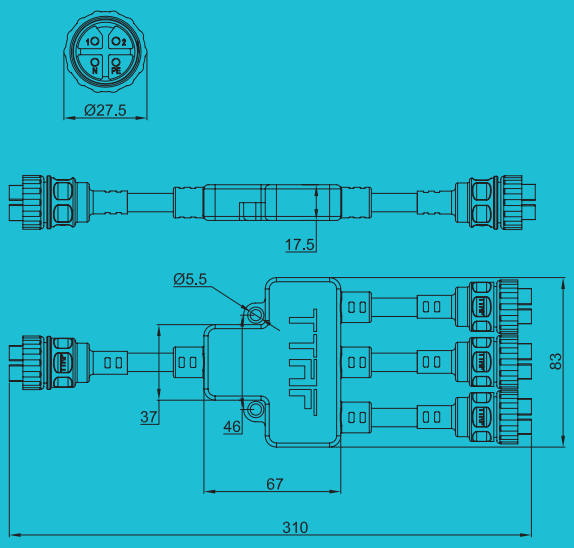

3 Pin Screw Connection Field Assembly 1in 3 out

Electrical Splitter

WPA Series

3 pin
250 VAC
20A

IP68
10m / 60min

NEW DESIGN

1x3

1in 3 out

3 Pin

FOBOS®

Waterproof Electrical Splitter Series

Technical Specifications

	Product Code WPA-0304N20
Number of Poles	3
Voltage Rating	250VAC max.
Current Rating	20A max.
Cable Cross Section Area	0,5mm² ~ 2,5mm²
Durability Voltage	1000VAC@60s.
Insulation Structure	500 MΩ at 500VDC
Contact Resistance	10 mΩ max
Min Wire Size OD	6mm
Max Wire Size OD	10mm
Temperature Rating	-40°C ~ +85°C
IP Class	IP68 (10m / 60min)
Mold Material	PA6
Contact/Terminal Material	Nickel-Plated Brass
Seal Material	Silicone

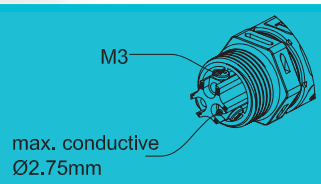

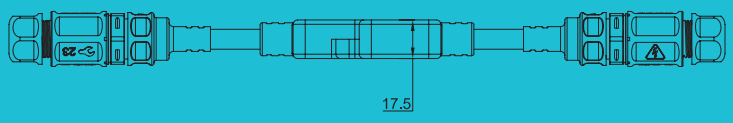

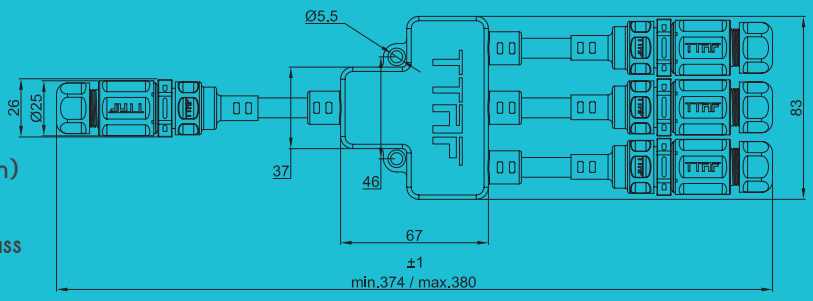

3 Pin Screw Connection Field Assembly 1in 5 out

Electrical Splitter

NEW DESIGN

WPA Series

3 pin
250 VAC
20A

IP68
10m / 60min

1x5

1 in 5 out

3 Pin

FOBOS®

Waterproof Electrical Splitter Series

Technical Specifications	Product Code WPA-0306N20
Number of Poles	3
Voltage Rating	250VAC max.
Current Rating	20A max.
Cable Cross Section Area	0,5mm² ~ 2,5mm²
Durability Voltage	1000VAC@60s.
Insulation Structure	500 MΩ at 500VDC
Min Wire Size OD	6mm
Max Wire Size OD	10mm
Temperature Rating	-40°C ~ +85°C
IP Class	IP68 (10m / 60min)
Mold Material	PA6
Contact/Terminal Material	Nickel-Plated Brass
Seal Material	Silicone

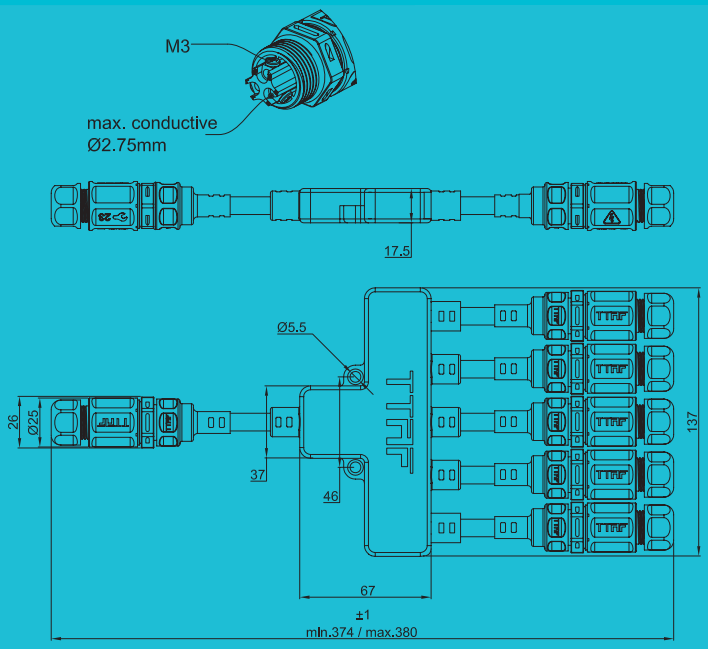

IP BOX WP-BOX-04

Electrical Splitter

IP68
2m / 60min

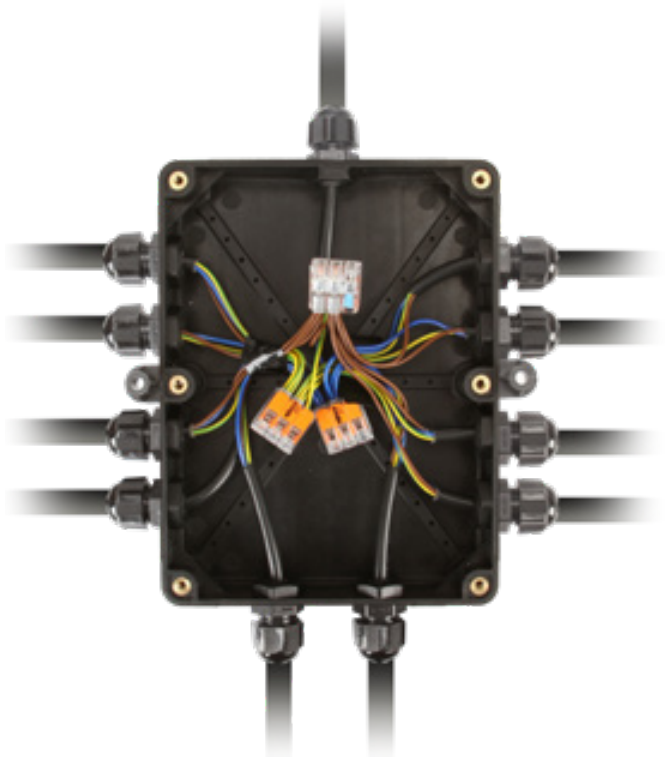

Technical Specifications	Product Code WP BOX-04
Temperature Rating	-40°C ~ +85°C
IP Class	IP68 (2m / 60min)
Mold Material	ABS, PP
Dimensions	170x130x40mm
Cable Gland Max Diameter	14mm

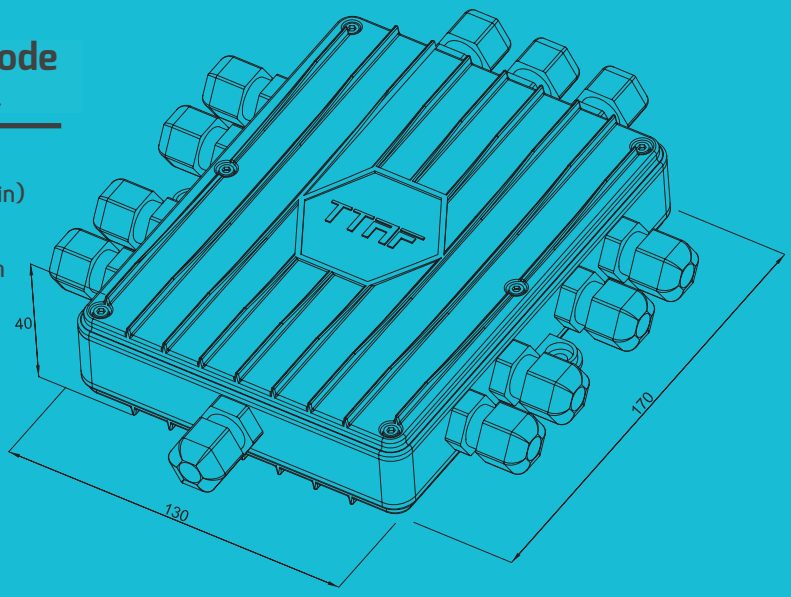

IP BOX WP-BOX-05

WP BOX Series

Electrical Splitter

NEW DESIGN

IP68
2m / 60min

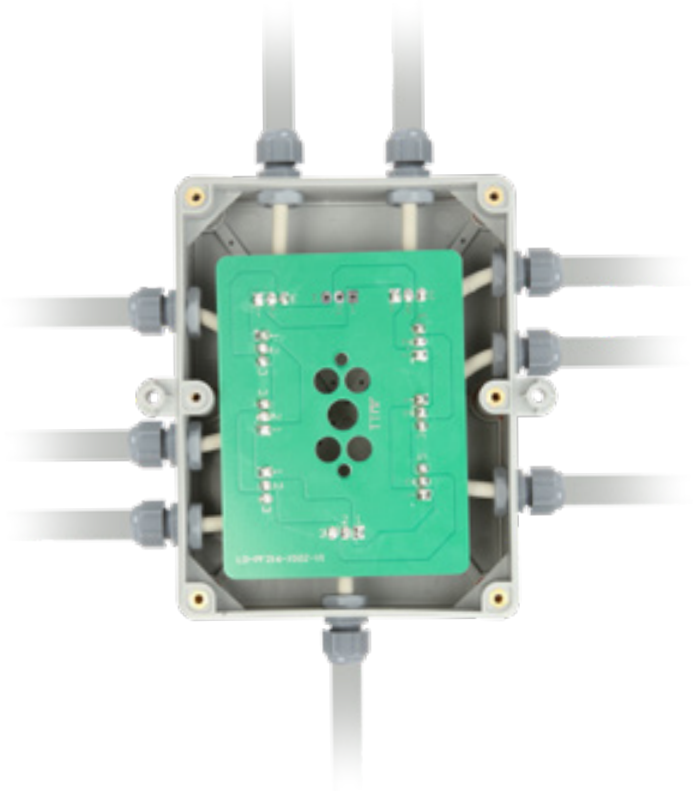

Technical Specifications	Product Code WP BOX-05
Temperature Rating	-40°C ~ +85°C
IP Class	IP68 (2m / 60min)
Mold Material	ABS, PP
Dimensions	170x130x60mm
Cable Gland Max Diameter	14mm

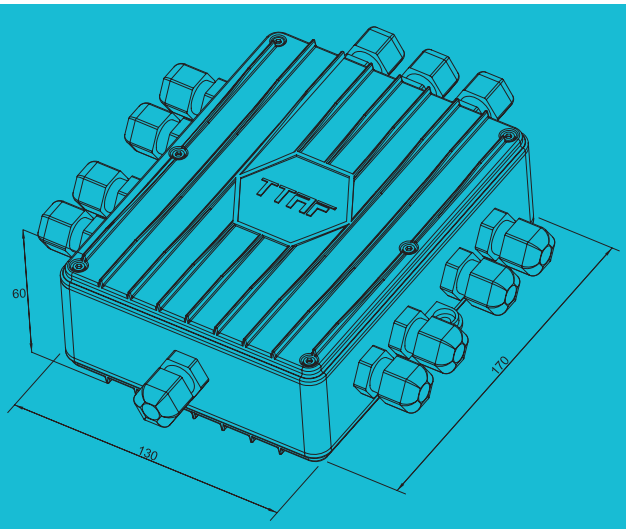

Cable Jointer

IP68

IPJ50 is a cable jointer with IP68 sealing feature when it is closed and **inner diameter of 50mm.**

You can connect two cables with any connector without sealing feature inside IPJ50. There is no need for a chemical as in case of equivalent connectors.

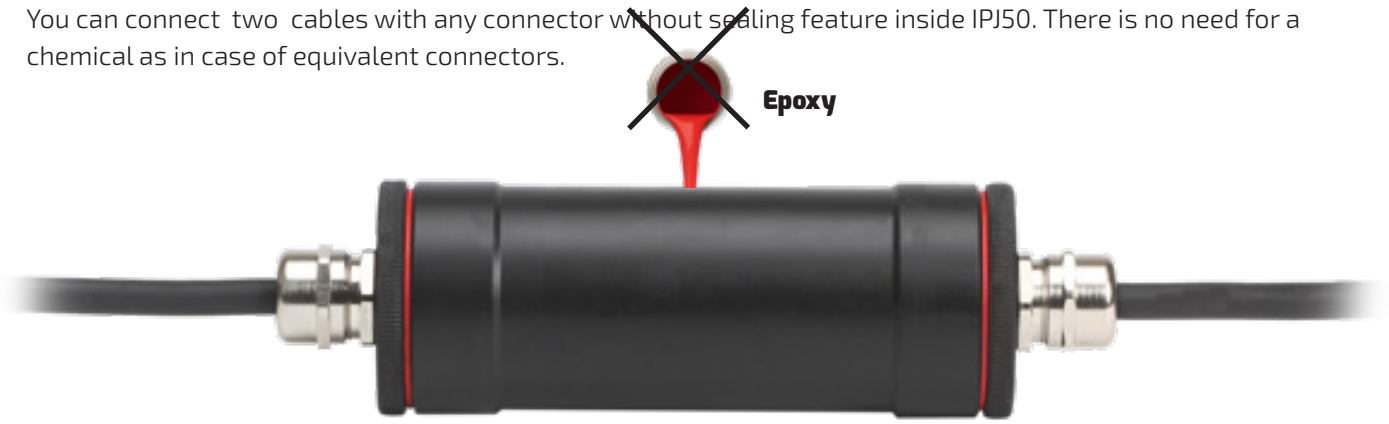

Product Code	Cable Gland Size	Length (L) mm	Handtool Size	Cable OD Ømin-max mm
IPJ50-3	M 12 x 1,5	204	14	3 - 6,5
IPJ50-4	M 16 x 1,5	206	17 - 18	4 - 8
IPJ50-6	M 20 x 1,5	213	22	6 - 12
IPJ50-10	M 25 x 1,5	216	24 - 27	10 - 14
IPJ50-13	M 32 x 1,5	223	30 - 34	13 - 18
IPJ50-18	M 40 x 1,5	236	40 - 43	18 - 25

Technical Specifications

Body Material	Cast Polyamide
IP Class	IP68
Operating Temperature	-40°C ~ +100°C
Inner Diameter	50mm
Sealing Ring	Silicone
Outer Diameter	58mm
Cap nut & Gland Body	Brass With Nickel Plated
Clamping Insert	PA6 V2
Gland Sealing Ring	TPV
Gland O-ring	NBR

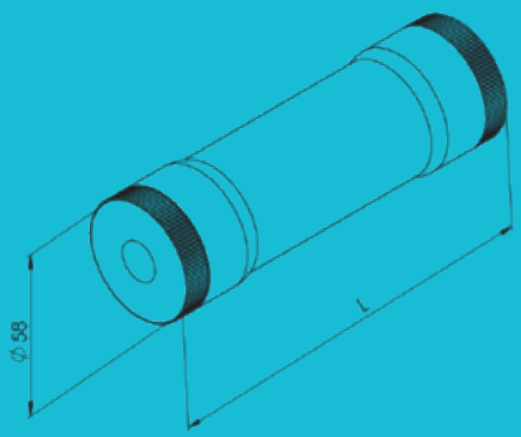

Cable Jointer

IP68

IPJ24 is a cable jointer with IP68 sealing feature when it is closed and **inner diameter of 24mm.**

You can connect two cables with any connector without sealing feature inside IPJ24. There is no need for a chemical as in case of equivalent connectors.

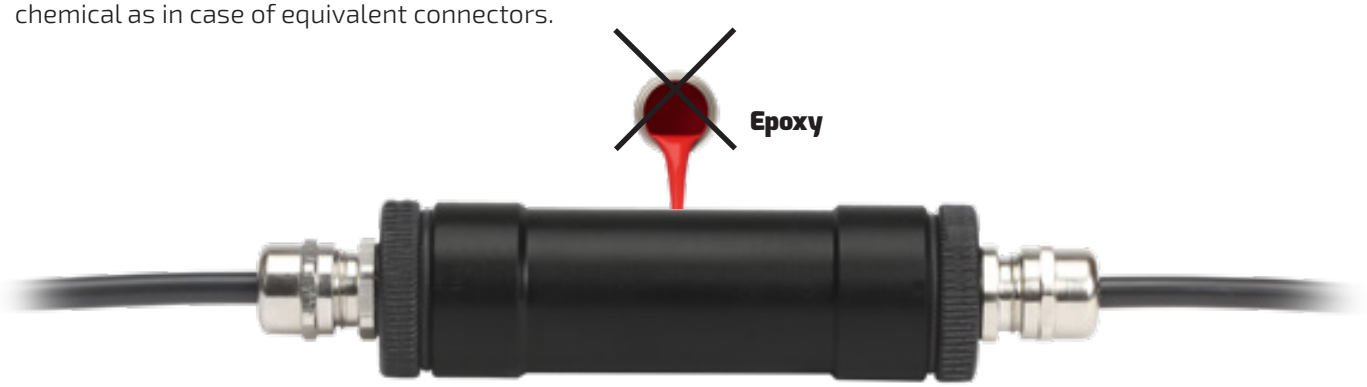

Product Code	Cable Gland Size	Length (L) mm	Handtool Size	Cable OD Ømin-max mm
IPJ24-3	M 12 x 1,5	154	14	3 - 6,5
IPJ24-4	M 16 x 1,5	156	17 - 18	4 - 8
IPJ24-6	M 20 x 1,5	163	22	6 - 12

Technical Specifications

Body Material	Cast Polyamide
IP Class	IP68
Operating Temperature	-40°C ~ +100°C
Inner Diameter	24mm
Sealing Ring	Silicone
Outer Diameter	32mm
Cap nut & Gland Body	Brass With Nickel Plated
Clamping Insert	PA6 V2
Gland Sealing Ring	TPV
Gland O-ring	NBR

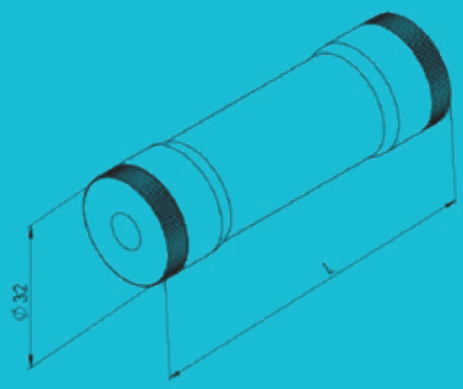

Waterproof Fuse Holder

Maxi Blade Fuse Type

WFH-M Series

NEW DESIGN

IP66

WFH-M overmolded ,heavy-duty & waterproof inline fuse holder for maxi blade fuses with protective cover for harsh environments.

20 to 35 amps. Supplied 6mm² (AWG10) cable

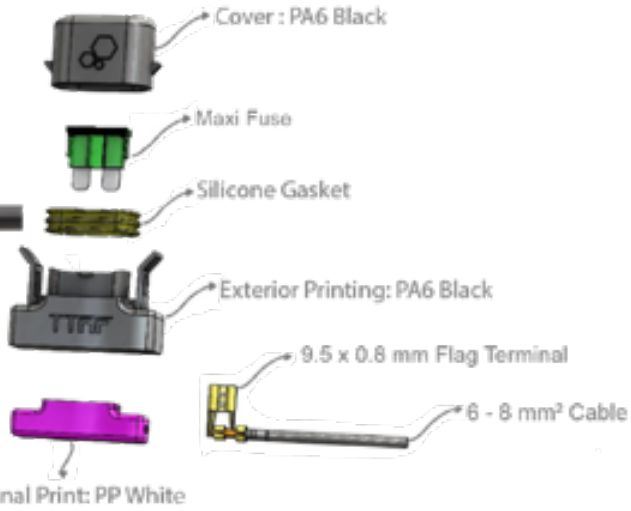

Maxi Blade Fuse Current Range

20A
25A
30A
35A

Technical Specifications

Body Material	PA6
IP Class	IP66
Operating Temperature	-40°C ~ +100°C
Contact Material	Brass With Nickel Plated
Sealing Ring	Silicone
Max. Current Range	35A

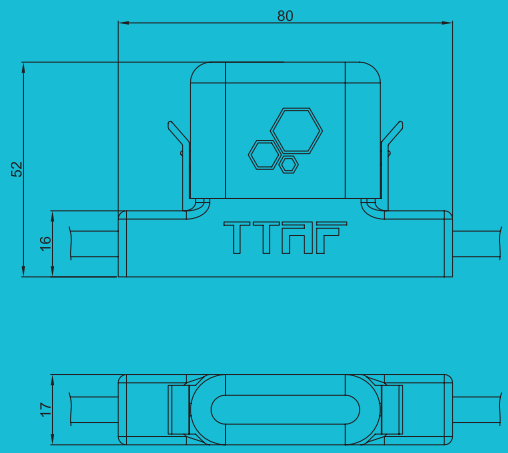

Waterproof Fuse Holder

Mini Blade Fuse Type

WFH-K Series

NEW DESIGN

IP66

WFH-K overmolded ,heavy-duty & waterproof inline fuse holder for mini blade fuses with protective cover for harsh environments.

2 to 25 amps. Supplied 2.5mm² (AWG14) cable

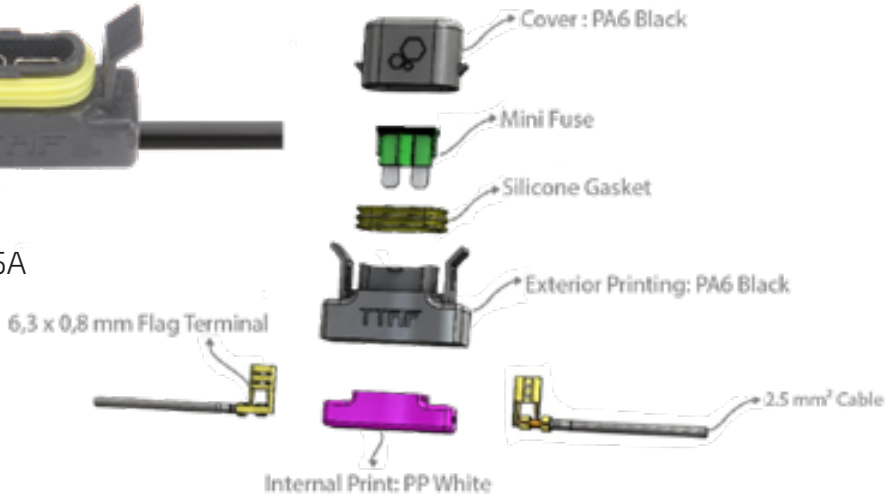

Mini Blade Fuse Current Range

2A, 3A, 4A, 5A, 7,5A, 10A, 15A, 20A, 25A

Technical Specifications

Body Material	PA6
IP Class	IP66
Operating Temperature	-40°C ~ +100°C
Contact Material	Brass With Nickel Plated
Sealing Ring	Silicone
Max. Current Range	25A

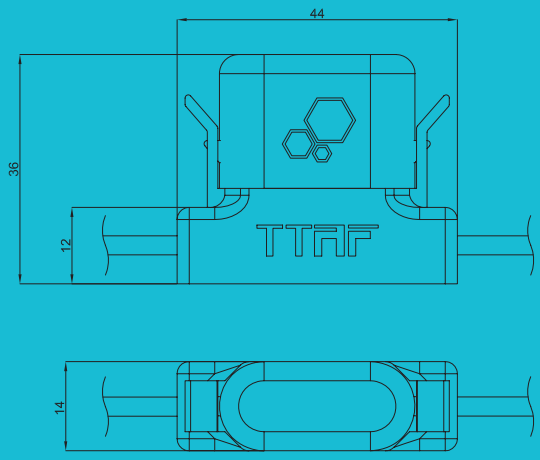

Kavaklı Mahallesi, İstanbul Caddesi, No: 21
Beylikdüzü - İstanbul / Türkiye
Tel: +90 212 855 82 20
Fax: +90 212 855 82 21
www.ttaf.com.tr
export@ttaf.com.tr
ttafelectronic