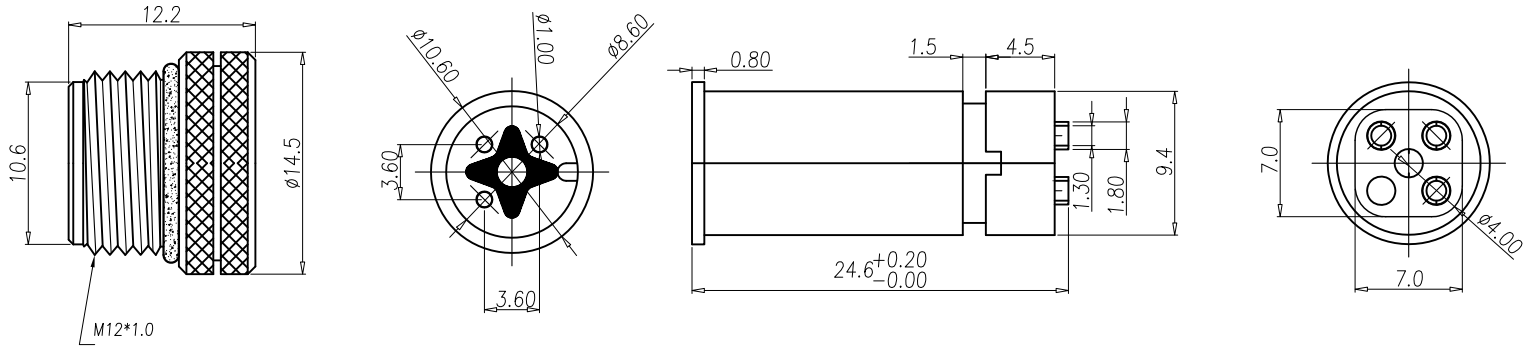

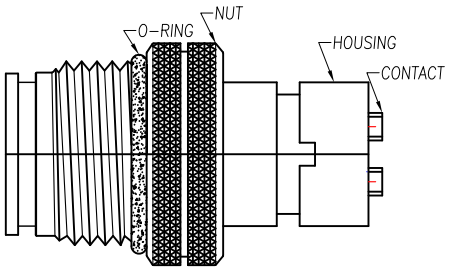

ASSEMBLY

1. MATERIAL :
   1-1. HOUSING : PBT UL94V-0;COLOR: BLACKK
   1-2. CONTACT : BRASS
   1-3. NUT : BRASS
   1-4. O-RING :EPDM; COLOR : BLACK
2. FINISH :
   2-1. CONTACT A : 10 MICRO INCHES MIN. GOLD PLATED
   UNDER PLATE : NICKEL
   2-2. NUT : NICKEL PLATED 60u" ~ 100u" OVER ALL
3. ELECTRICAL SPECIFICATION :
   3-1. Rated current : 5A
   3-2. Voltage :125V
   3-3. Water proof: IPX7
4. Environmental :
   4-1. Operation Temperature : -20 ℃~85℃

Date	20.05.2011	Rev.	Revision Detail	Rev.Dt.	Rev.by	Part No	
Designed by	İLKNUR	-				TT12M3P-W-A-P-2-G10-B-N	
Checked by	A.BAHÇIVAN						
TTAF						Drawing Nr.	Scale / Sheet No
						-	NONE / 1/1

Form No: FR-01/004 İYT: 10/2003 Rev:05 22/03/2010

A4